## Ausführungen | Versions ST-161

| Bezeichnung<br>Description | Anschluß/Access | | | | Artikel-Nr.<br>Item-No. |
|---|---|---|---|---|---|
| ST-161 Dosierventil<br>ST-161 Metering valve | M14x1 AG | | | | 20 0161 500 |
| | | | | | |
| | | | | | |
| | | | | | |
| | | | | | |
| | | | | | |
| | | | | | |
| | | | | | |
| | | | | | |
| | | | | | |
| | | | | | |
| | | | | | |
| | | | | | |
| | | | | | |

## Technische Daten | Specification

| | | |
|---|---|---|
| Druck / Pressure (max.) | 350 bar | 5070 psi |
| Temperatur / Temperature (max.) | 150°C | 300°F |
| Gewicht / Weight | 0,18 kg | |

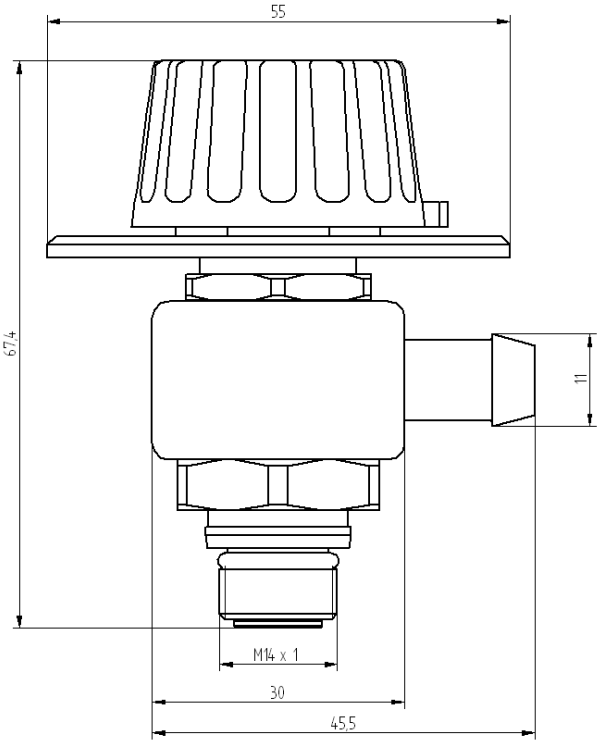


*... Suttner GmbH ·Hauptstraße 15-17 · D-33818 Leopoldshöhe*
*tel +49 52 08 91 46-0 · fax +49 52 08 91 46-15*
*www.suttner.net · eMail: info@suttner.net*

*... Suttner GmbH ·Hauptstraße 15-17 · D-33818 Leopoldshöhe*
*tel +49 52 08 91 46-0 · fax +49 52 08 91 46-15*
*www.suttner.net · eMail: info@suttner.net*